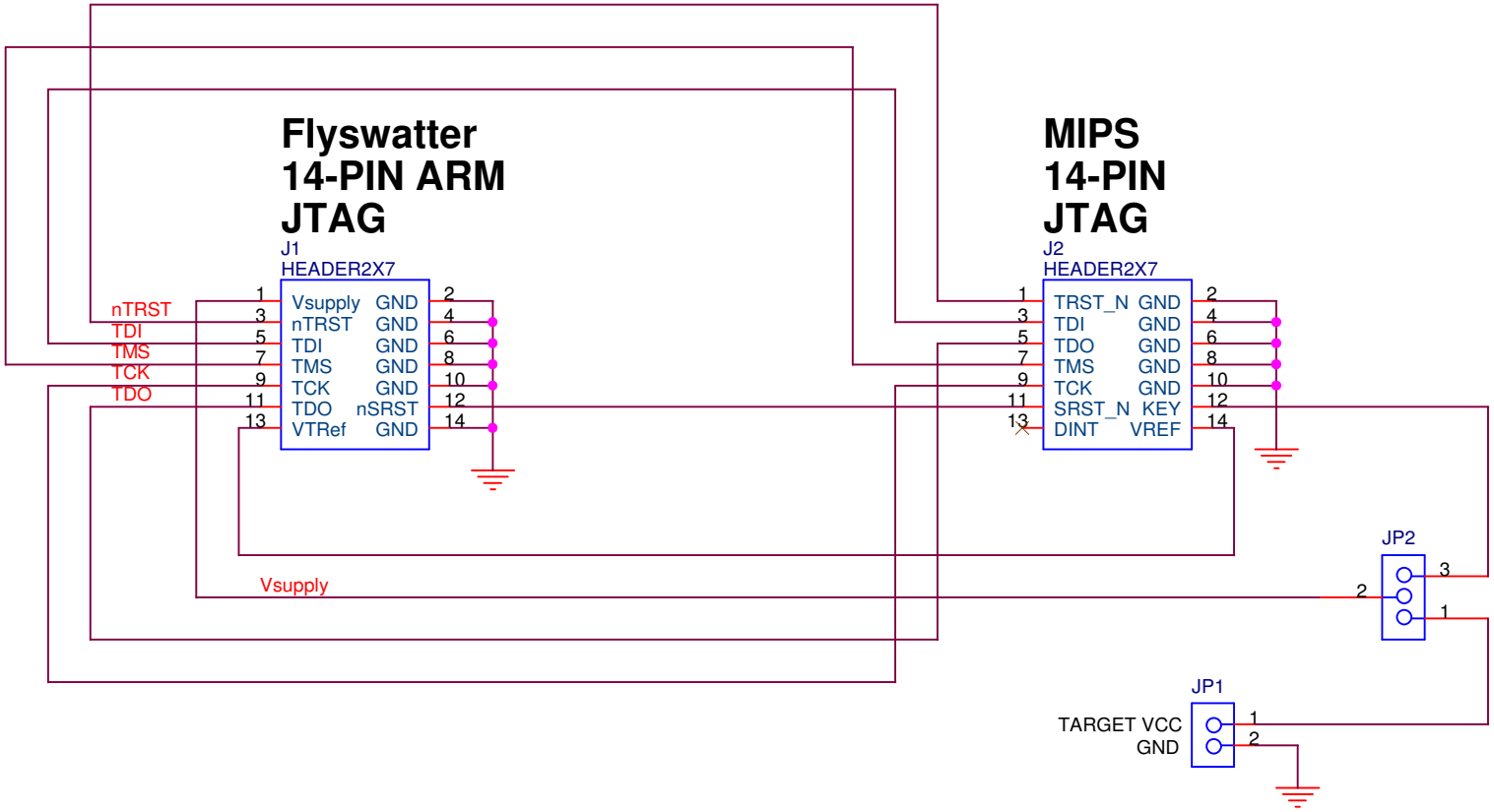

www.TinCanTools.com

Title	MIPS JTAG Adapter	
Size A	Document Number MIPS_JTAG_Adapter	Rev 01
Date: Wednesday, January 14, 2009	Sheet 1 of 1	