Connecting A USB Host Interface To The Hammer

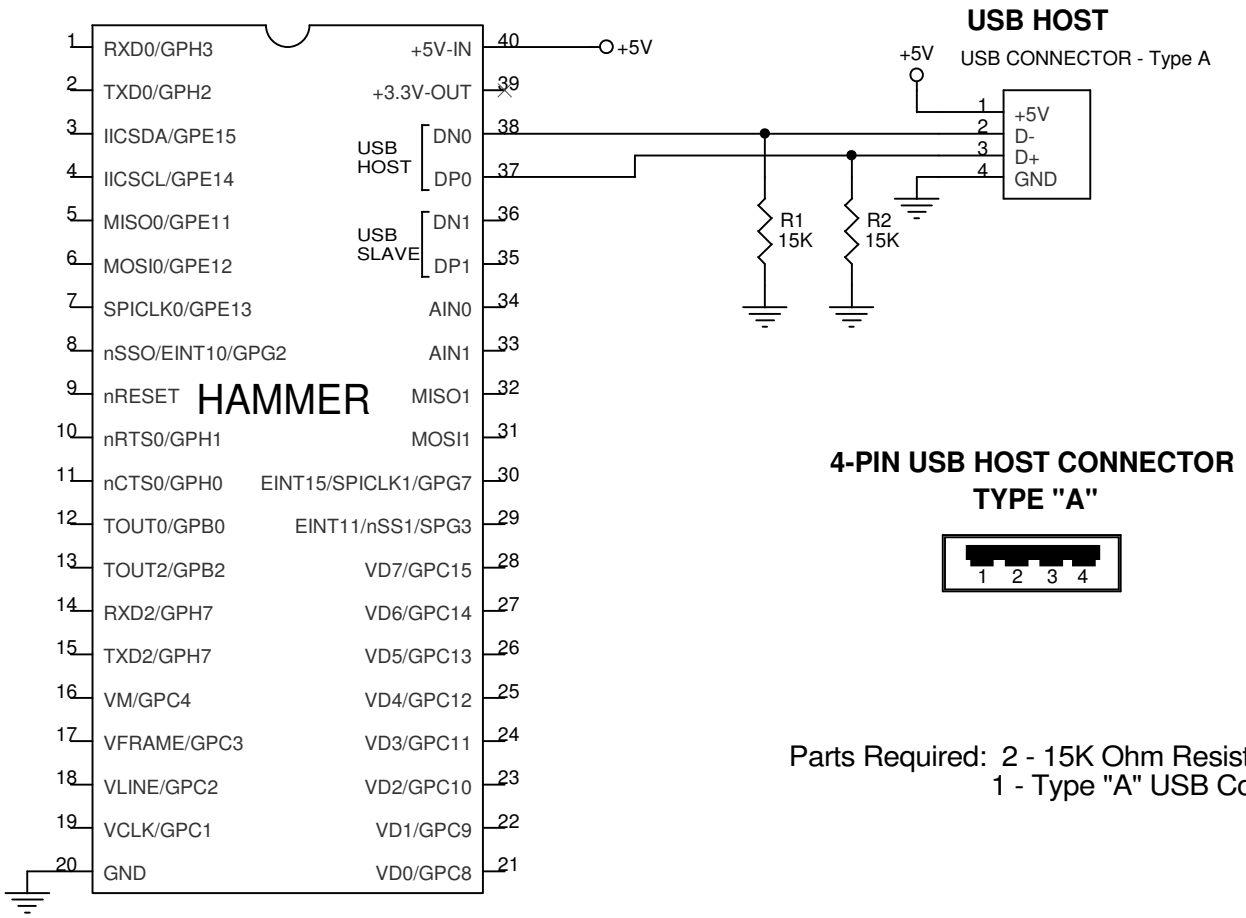

4-PIN USB HOST CONNECTOR TYPE "A"

Parts Required: 2 - 15K Ohm Resistors
1 - Type "A" USB Connector

www.TinCanTools.com